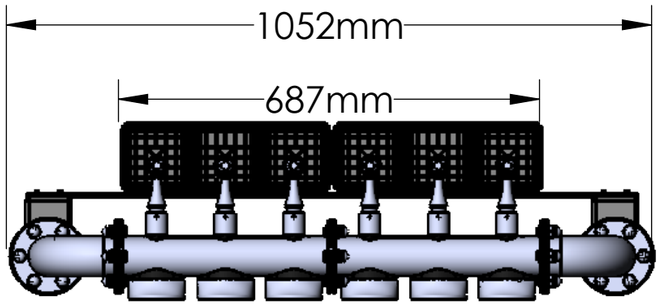

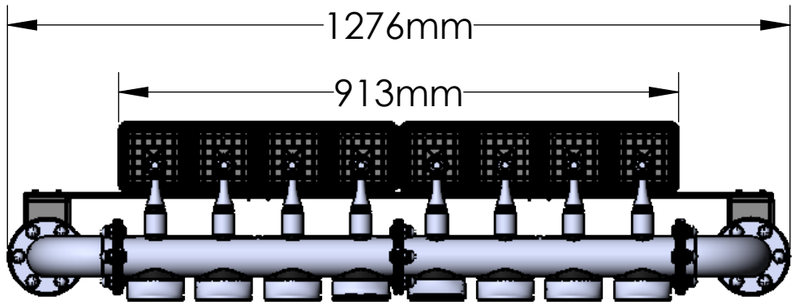

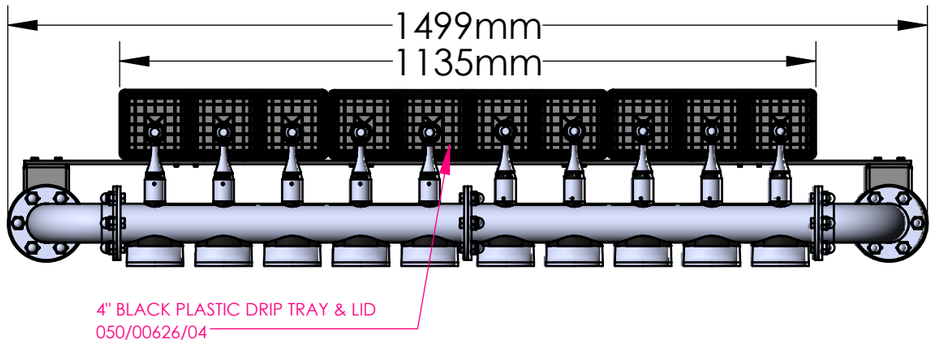

6 OUT

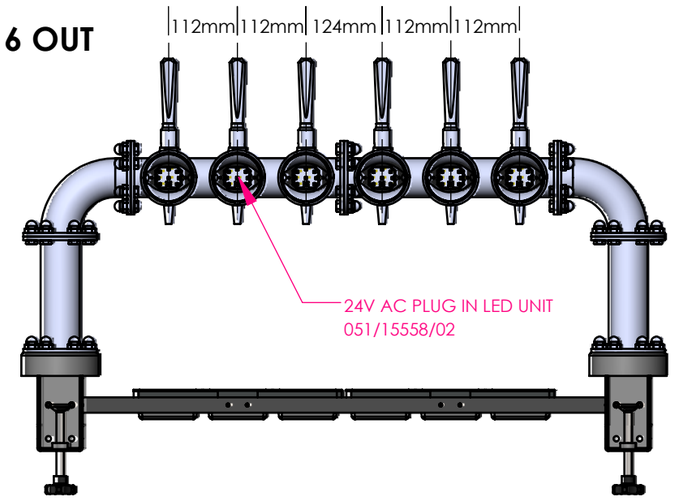

8 OUT

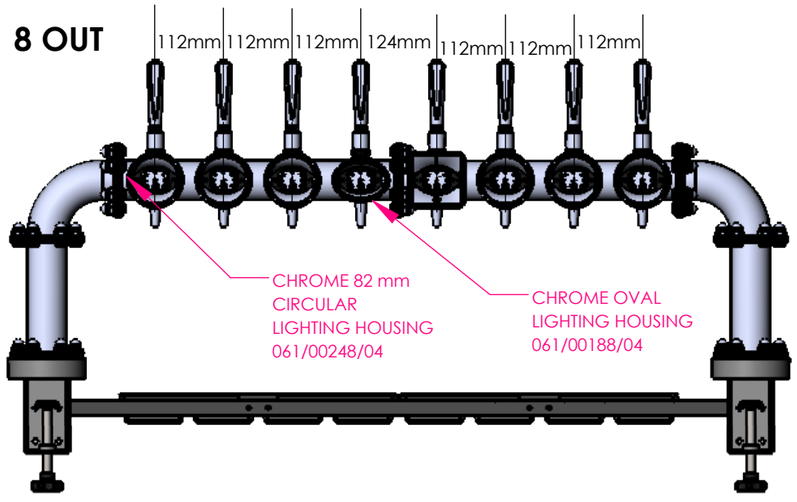

10 OUT

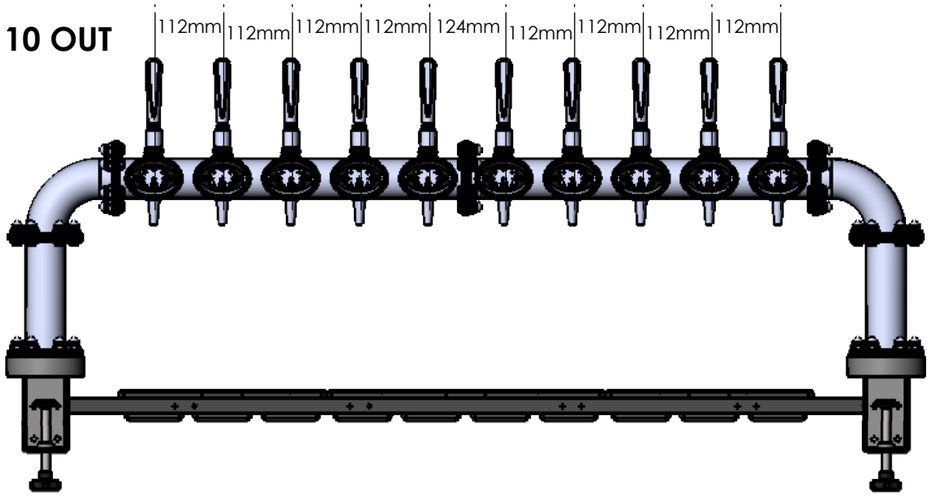

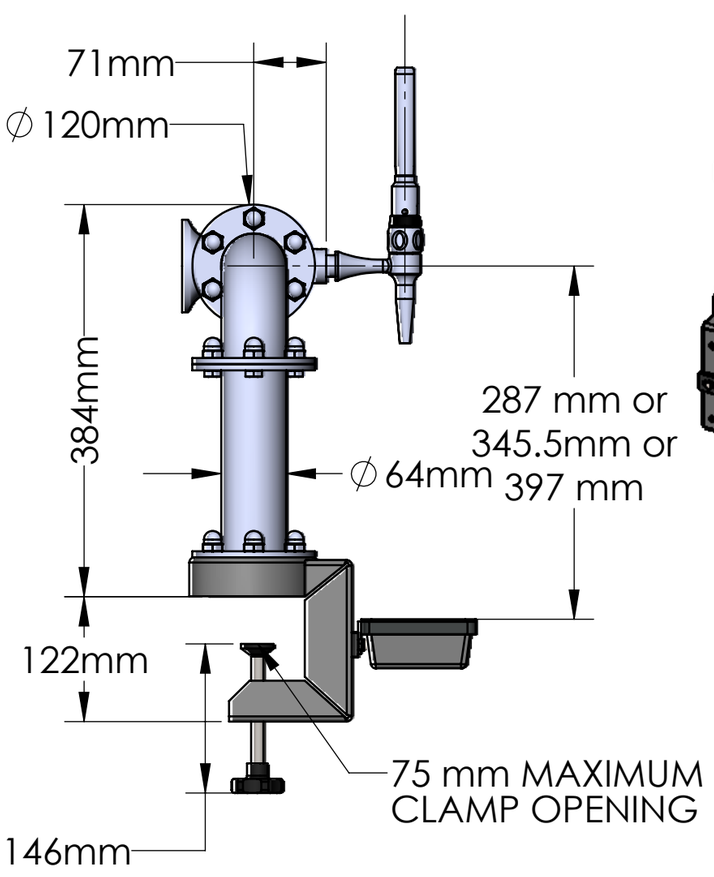

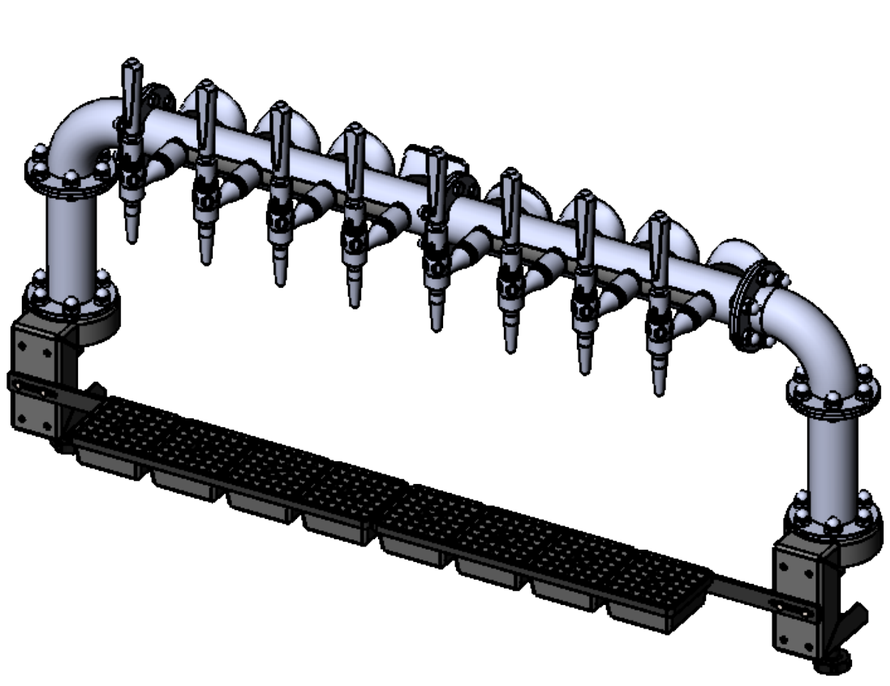

*SHOWN WITH OPTIONAL EXTRA
ELEGANCE DISPENSE TAPS

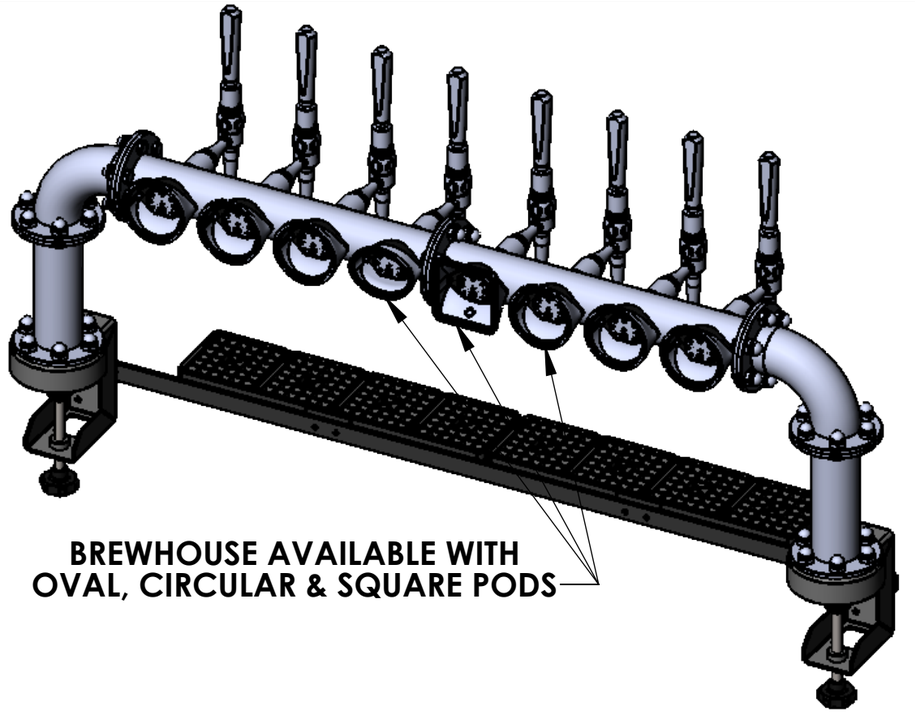

BREWHOUSE

CLAMP ON

MICRO MATIC

3 OUT

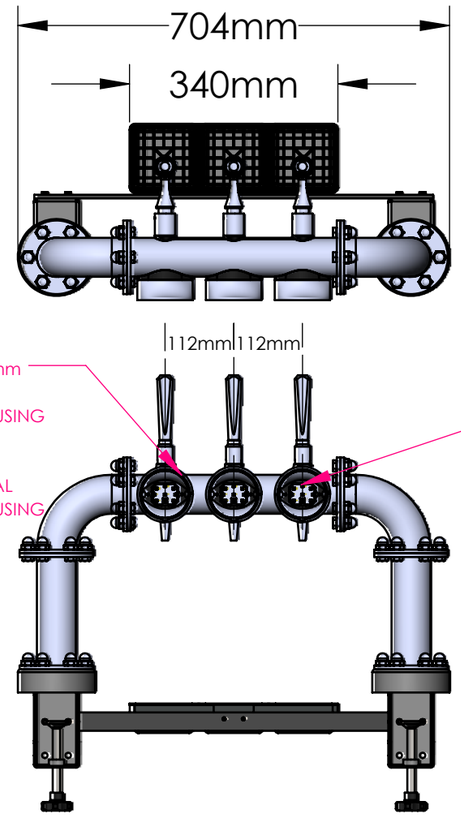

4 OUT

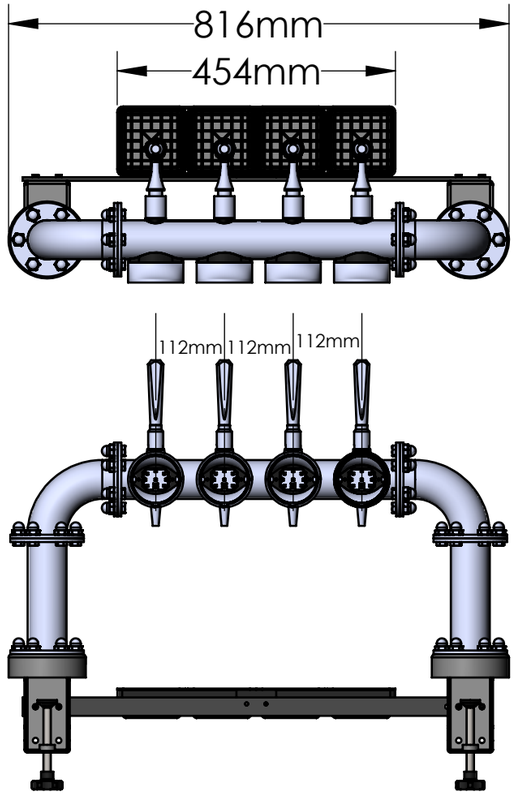

5 OUT

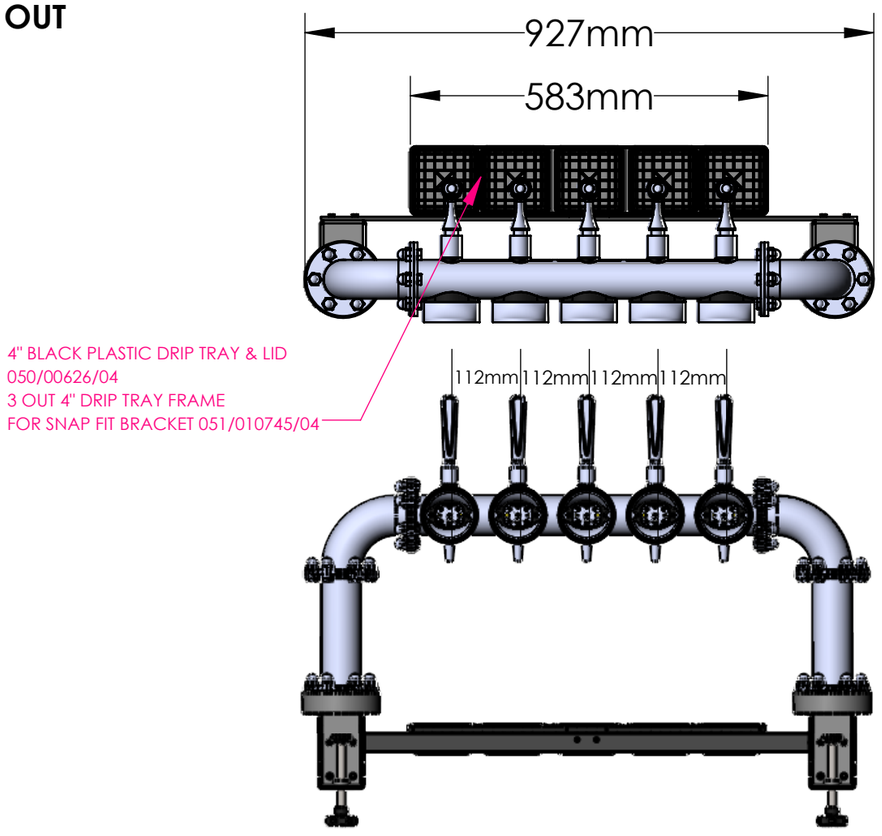

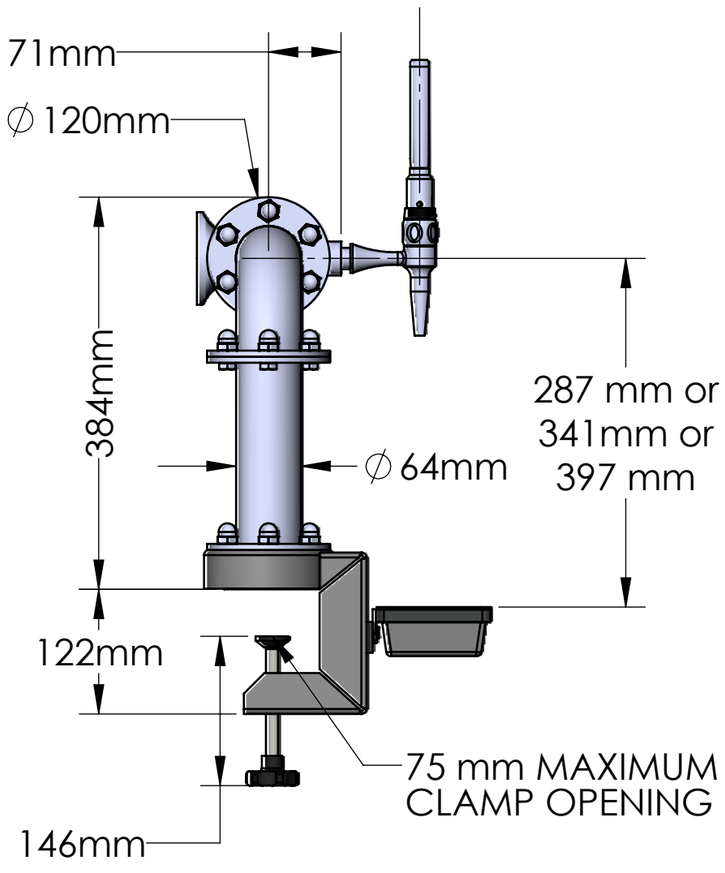

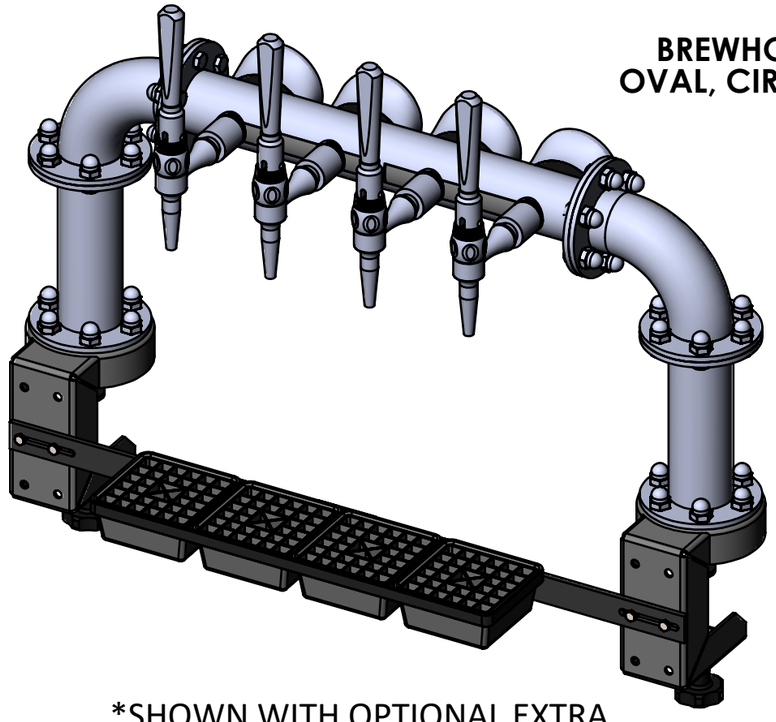

*SHOWN WITH OPTIONAL EXTRA
ELEGANCE DISPENSE TAPS

**BREWHOUSE AVAILABLE WITH
OVAL, CIRCULAR & SQUARE PODS**

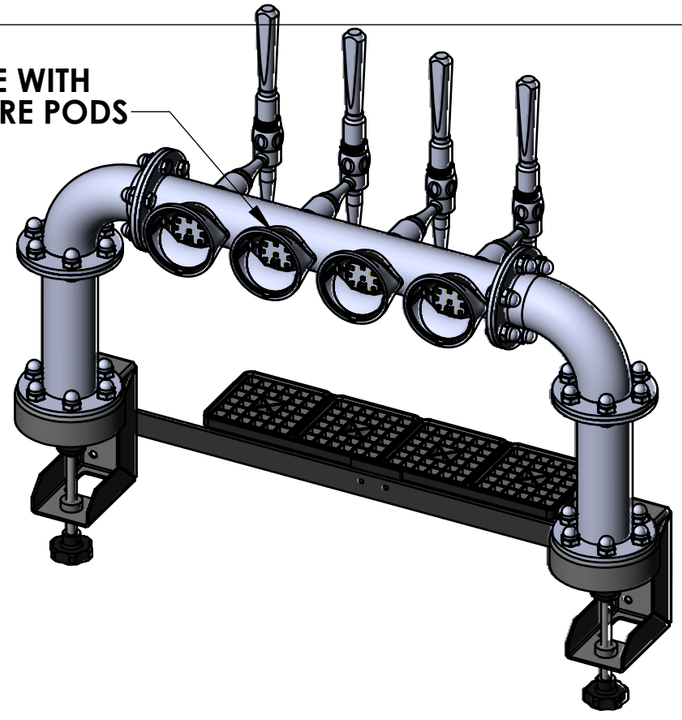

BREWHOUSE

3, 4 & 5 OUT CLAMP ON

MICRO MATIC

3 OUT

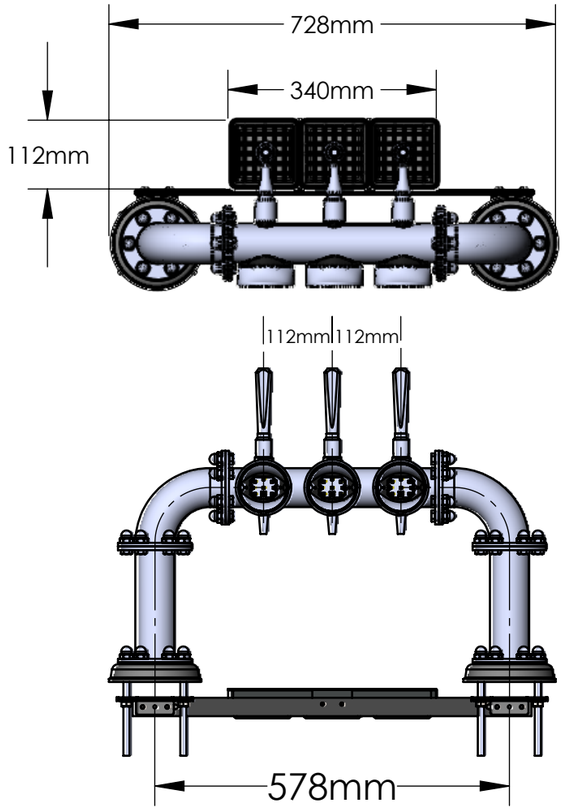

4 OUT

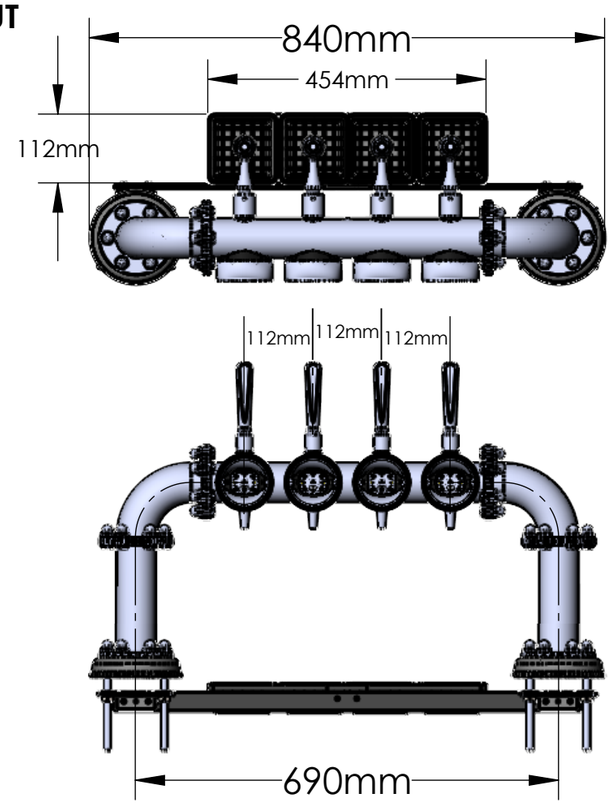

5 OUT

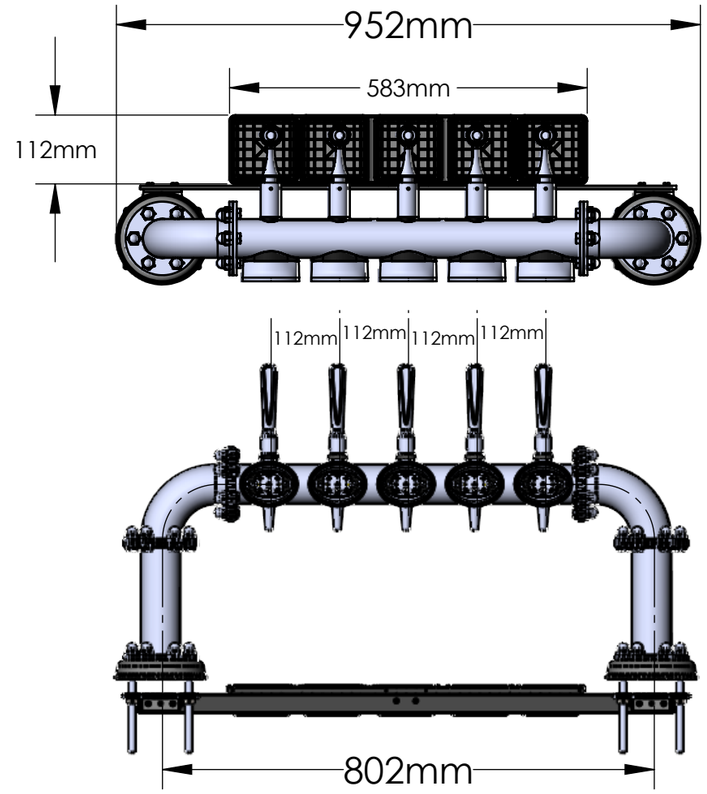

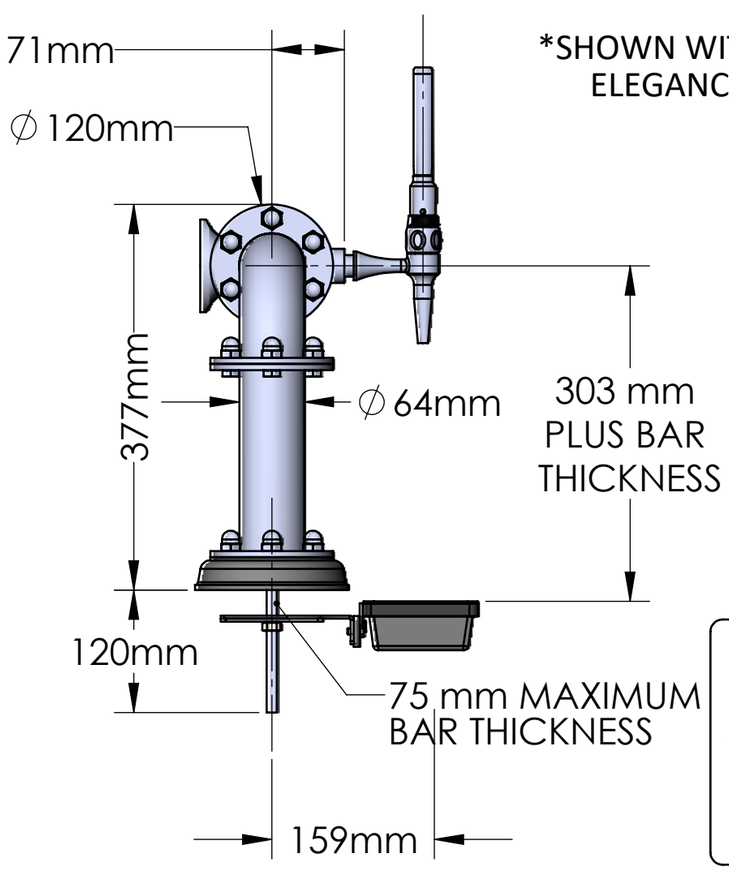

*SHOWN WITH OPTIONAL EXTRA
ELEGANCE DISPENSE TAPS

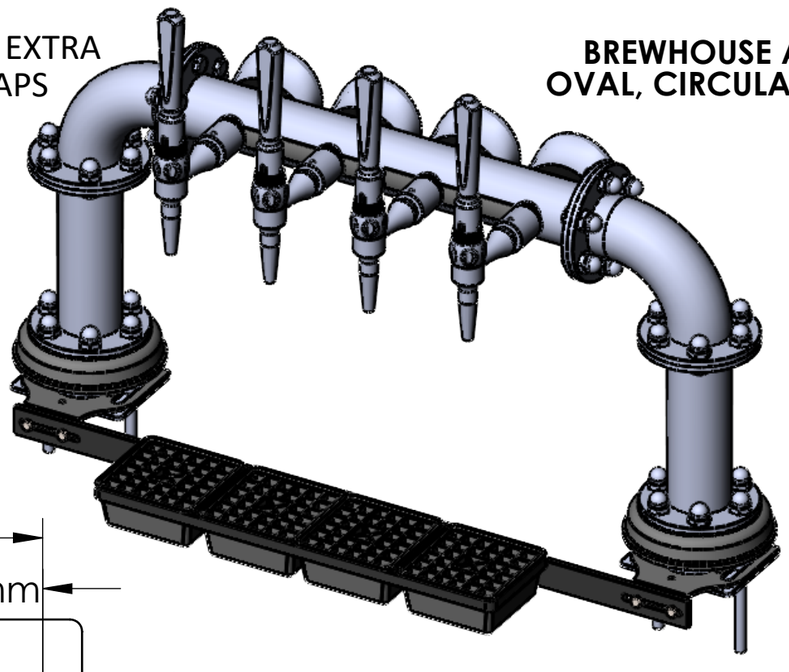

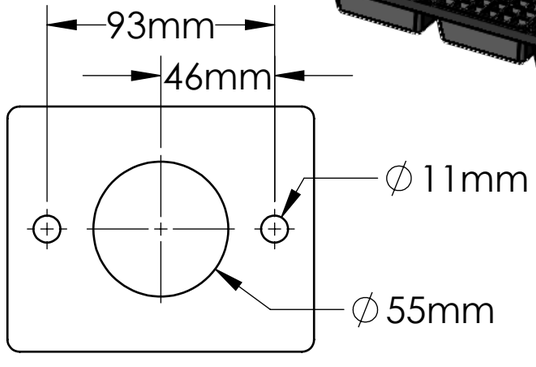

**REQUIRED CUT OUT
FOR THROUGH BAR FIXING**

**BREWHOUSE AVAILABLE WITH
OVAL, CIRCULAR & SQUARE PODS**

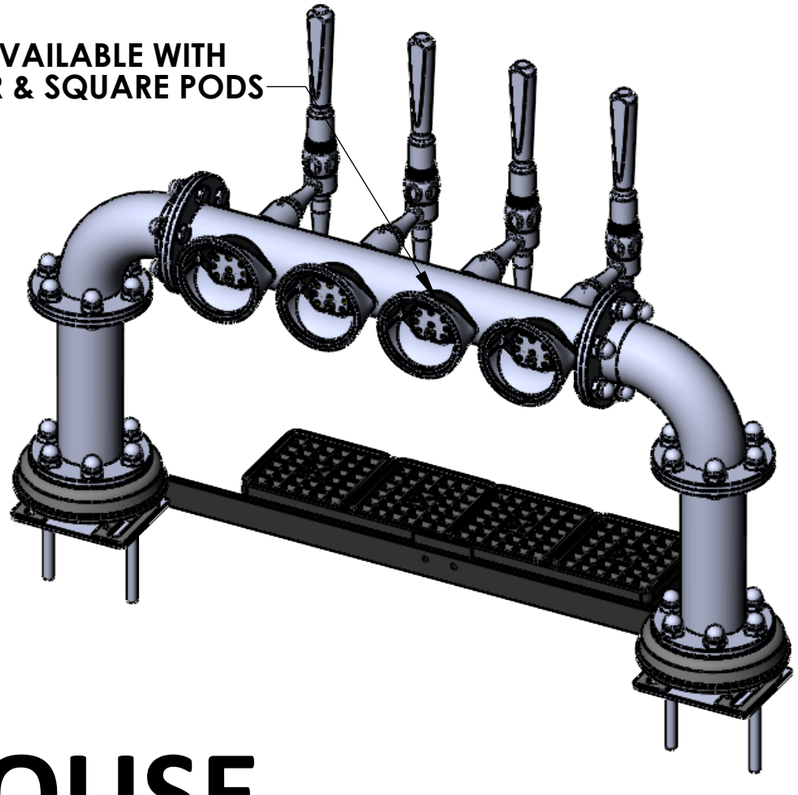

BREWHOUSE

3, 4 & 5 OUT THROUGH BAR

MICRO MATIC

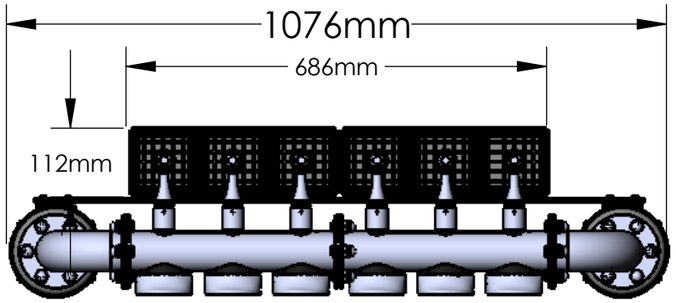

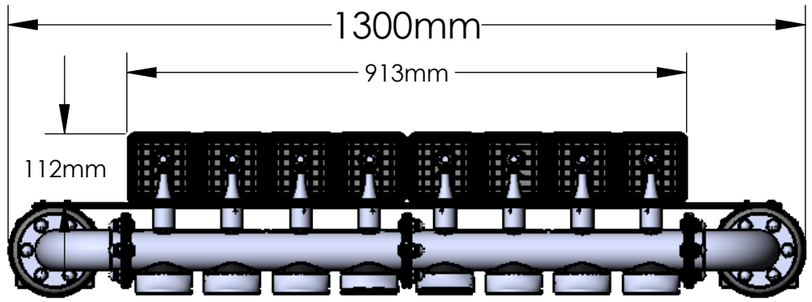

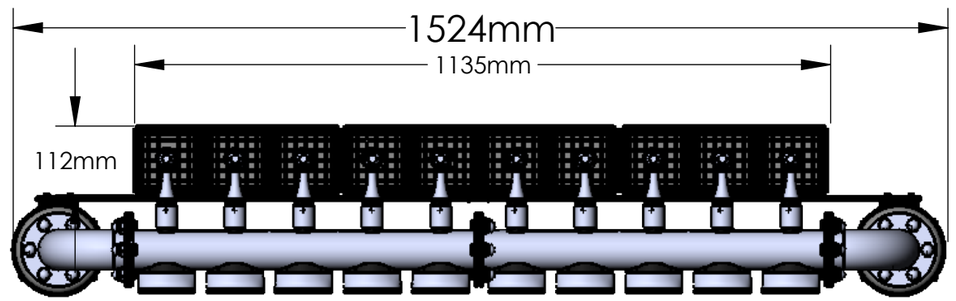

6 OUT

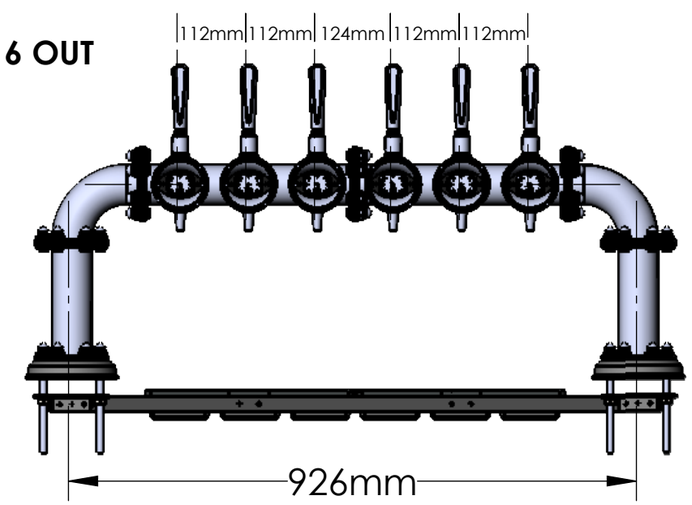

8 OUT

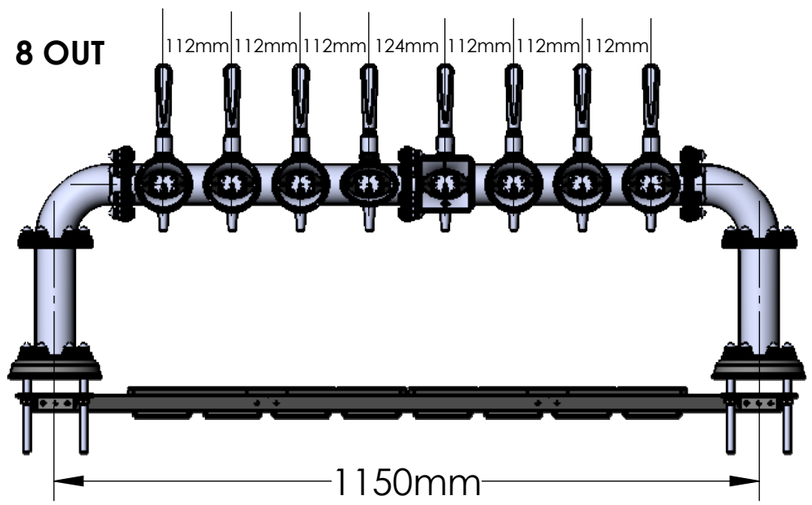

10 OUT

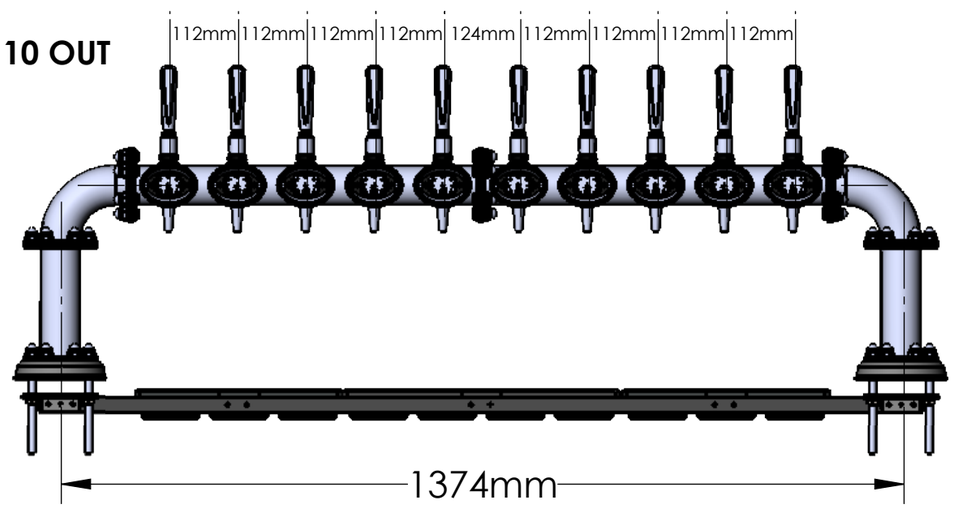

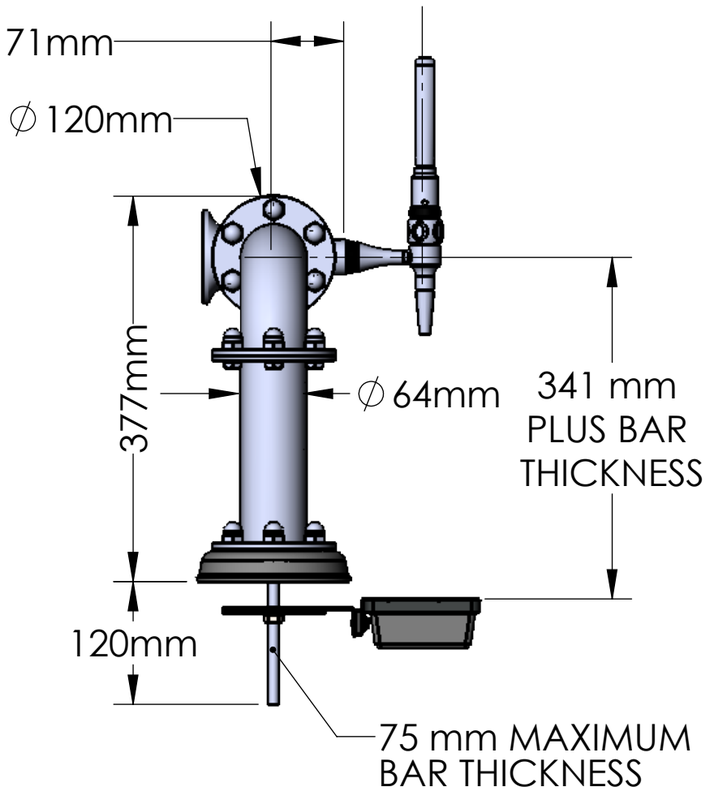

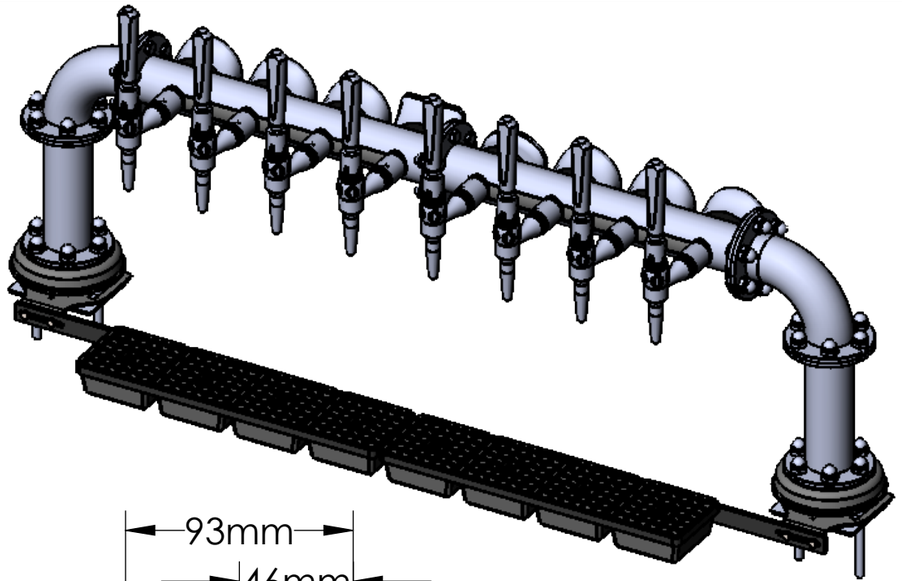

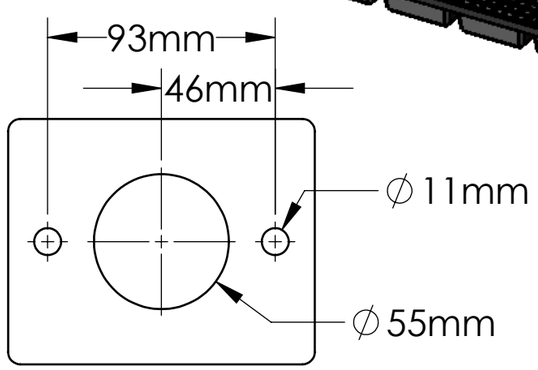

REQUIRED CUT OUT
FOR THROUGH BAR FIXING

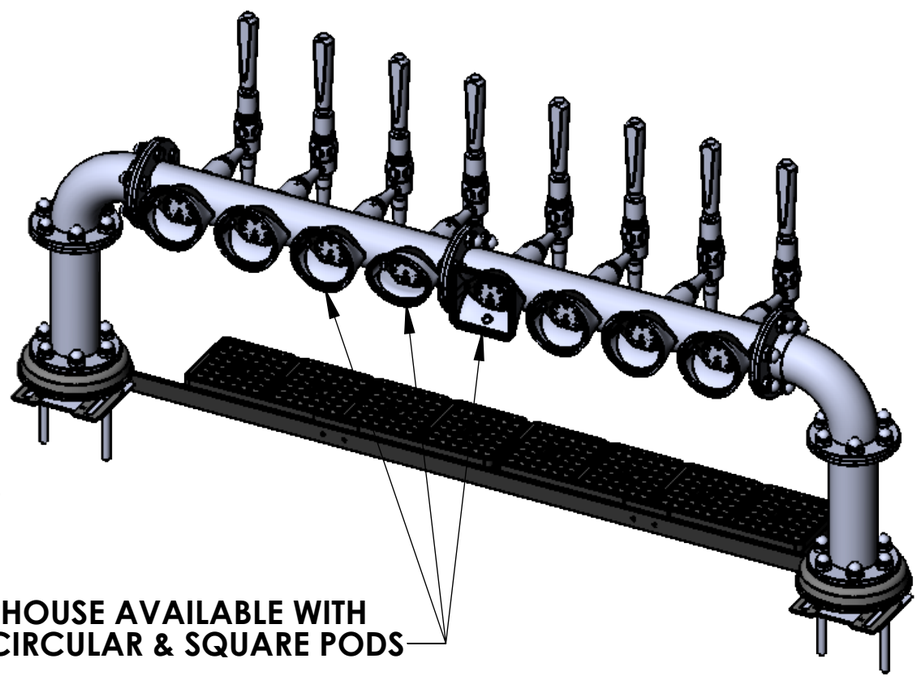

BREWHOUSE AVAILABLE WITH
OVAL, CIRCULAR & SQUARE PODS

BREWHOUSE

THROUGH BAR

MICRO MATIC